DEPARTMENT OF CIVIL ENGINEERING
Khulna University of Engineering & Technology

Experiment No. : **2**

Name of the Experiment: **Development of Generalized Specific Energy and Specific Force Curves**

Apparatus: i) Multipurpose Tilting Flume
ii) Stop watch

Specific energy:

The concept of specific energy was first introduced by Bakhmeteff in 1912 and is defined as the average energy per unit weight of water at a channel section as expressed with respect to the channel bottom. Since the piezometric level coincides with the water surface, the piezometric head with respect to the channel bottom is

$$\frac{P}{\rho g} + z = y \text{, the water depth} \tag{1}$$

So, the specific energy head can be expressed as:

$$E = y + \alpha \frac{V^2}{2g} \tag{2}$$

We find that the specific energy at a channel section equals the sum of the water depth (y) and the velocity head, provided of course that the streamlines are straight and parallel. Since $V = \frac{Q}{A}$, Equation (2) may be written as

$$E = y + \alpha \frac{Q^2}{2gA^2} \tag{3}$$

Where, A, the cross-sectional area of flow, can also be expressed as a function of the water depth, y. From this equation it can be seen that for a given channel section and a constant discharge *(Q),* the specific energy in an open channel section is a function of the water depth only. Plotting this water depth (y) against the specific energy (E) gives a specific energy curve as shown in Figure 1.

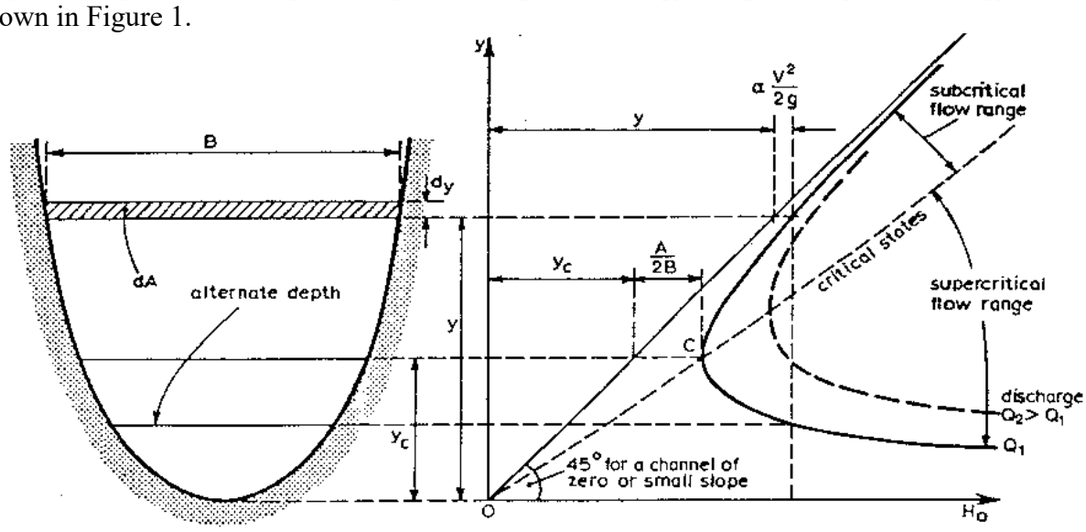

Fig. 1 The Specific Energy Curve

The curve shows that, for a given discharge and specific energy there are two 'alternate depths' of flow. At Point C the specific energy is a minimum for a given discharge and the two alternate depths coincide. This depth of flow is known as 'critical dept' (y_c).

When the depth of flow is greater than the critical depth, the flow is called sub-critical; if it is less than the critical depth, the flow is called super-critical. The curve illustrates how a given discharge can occur at two possible flow regimes; slow and deep on the upper limb, fast and shallow on the lower limb, the limbs being separated by the critical flow condition (Point C).

When there is a rapid change in depth of flow from a high to a low stage, a steep depression will occur in the water surface; this is called a 'hydraulic drop'. On the other hand, when there is a rapid change from a low to a high stage, the water surface will rise abruptly; this phenomenon is called a 'hydraulic jump' or 'standing wave'. The standing wave shows itself by its turbulence (white water), whereas the hydraulic drop is less apparent. However, if in a standing wave the change in depth is small, the water surface will not rise abruptly but will pass from a low to a high level through a series of undulations (undular jump), and detection becomes more difficult. The normal procedure to ascertain whether critical flow occurs in a channel contraction - there being sub-critical flow upstream and downstream of the contraction - is to look for a hydraulic jump immediately downstream of the contraction.

From Figure 1 it is possible to see that if the state of flow is critical, i.e. if the specific energy is a minimum for a given discharge, there is one value for the depth of flow only. The relationship between this minimum specific energy and the critical depth is found by differentiating Equation (3) to y, while Q remains constant.

$$\frac{dE}{dy} = 1 - \alpha \frac{Q^2}{gA^3} \frac{dA}{dy} \tag{4}$$

Since $dA = Bdy$, this equation becomes

$$\frac{dE}{dy} = 1 - \alpha \frac{V^2 B}{gA} \tag{5}$$

If the specific energy is a minimum, then $\frac{dE}{dy} = 0$, we may write

$$\alpha \frac{V_c^2}{2g} = \frac{A_c}{2B_c} \tag{6}$$

Equation (6) is valid only for steady flow with parallel streamlines in a channel of small slope. If the velocity distribution coefficient, α is assumed to be unity, the criterion for critical flow becomes

$$V_c = \left(\frac{gA_c}{B_c} \right)^{\frac{1}{2}} \tag{7}$$

Provided that the tail water level of the measuring structure is low enough to enable the depth of flow at the channel contraction to reach critical depth, continuity equations, energy equation and Equations (7) allow the development of a discharge equation for each measuring device, in which the upstream total energy head (H_1) is the only independent variable.

Equation (6) can be written for critical depth, y_c (assuming, α is to be unity) as:

$$y_c = \left(\frac{Q^2}{gB_c^{\,2}} \right)^{\frac{1}{3}} \tag{8}$$

Alternatively, critical depth, y_c can be written in terms of alternate depth as:

$$y_c = \left(\frac{2y_1^2 y_2^2}{y_1 + y_2} \right) \tag{9}$$

Alternatively, critical depth, y_c can be written in terms of critical specific energy, E_c as:

$$y_c = \tfrac{2}{3} E_c \tag{10}$$

At critical flow the average flow velocity is given by Equation (7). It can be proved that this flow velocity equals the velocity with which the smallest disturbance moves in an open channel, as measured relative to the flow. Because of this feature, a disturbance or change in a downstream level cannot influence an upstream water level if critical flow occurs in between the two cross-sections considered.

The 'control section' of a measuring structure is located where critical flow occurs and sub-critical, tranquil, or streaming flow passes into supercritical, rapid, or shooting flow. Thus, if critical flow occurs at the control section of a measuring structure, the upstream water level is independent of the tail water level; the flow over the structure is then called 'modular'.

If the discharge changes, the specific energy will be changed accordingly.

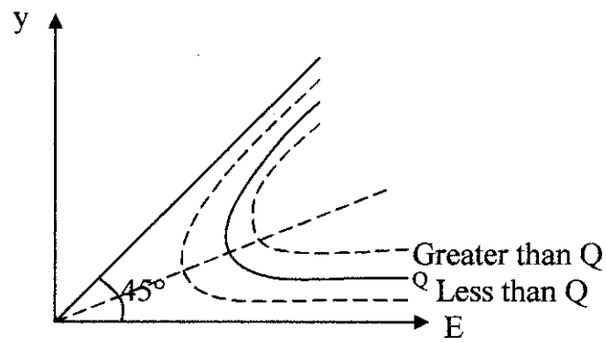

Fig. 2 Specific Energy Curves for Different Discharges

Dividing both sides of equation (3) by y_c and after simplification, one gets

$$\frac{E}{y_c} = \frac{y}{y_c} + \frac{1}{2}\left(\frac{y_c}{y}\right)^2 \tag{11}$$

Equation (11) is the generalized form of the relationship between specific energy and depth of flow in which each term is dimensionless.

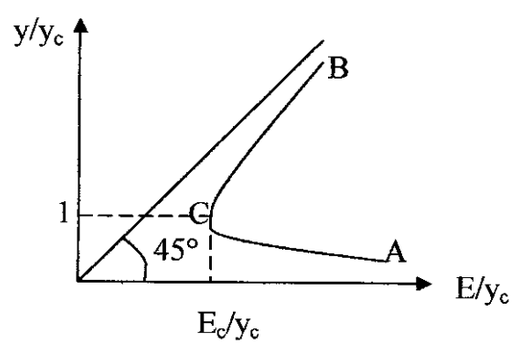

Fig. 3 Dimensionless Specific Energy Curve

Specific Force:

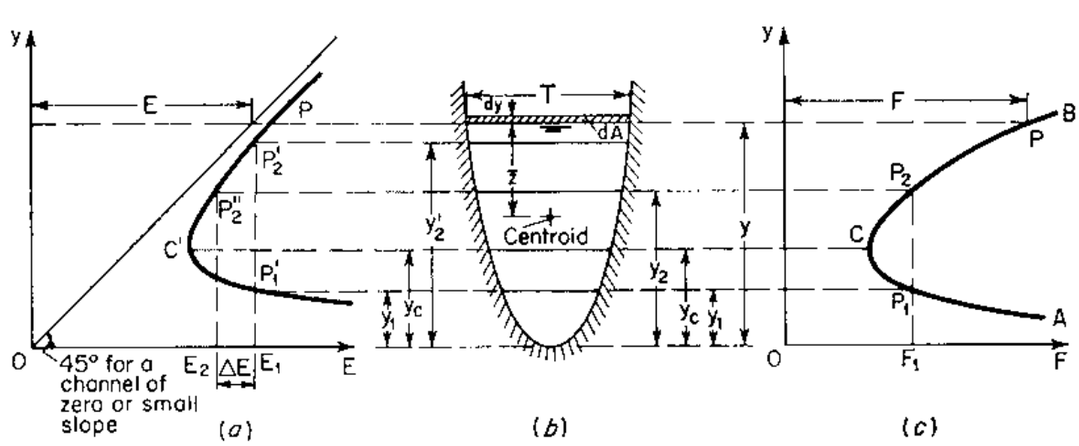

Fig. 4 Specific-force curve supplemented with specific-energy curve. *(a)* Specific energy curve; *(b)* channel section; *(c)* specific-force curve.

It is defined as the force at any section which is equal to sum of the momentum of the flow passing through the channel section per unit time per unit weigh of water and the force per unit weight of water.

Specific force for any channel section may be expressed as:

$$F = \frac{Q^2}{gA} + \bar{z}A \tag{12}$$

Where, z = vertical distance of the centroid of the cross section from the free surface

A = cross sectional area of flow

F = specific force

By plotting the depth against the specific force for a given channel section and discharge, a specific-force curve is obtained (Fig. 4c). This curve has two limbs *AC* and *BC*. The limb *AC* approaches the horizontal axis asymptotically toward the right. The limb *BC* rises upward and extends indefinitely to the right. For a given value of the specific force, the curve has two possible depths y_1 and y_2. At point *G* on the curve the two depths become one, and the specific force is a minimum. It can be easily prove that the depth at the minimum value of the specific force is equal to the critical depth, y_c.

Dividing both sides of Equation (12) by $y_c^2 b$ and simplifying one can obtains

$$\frac{F}{y_c^2 b} = \frac{y_c}{y} + \frac{1}{2}\left(\frac{y}{y_c}\right)^2 \tag{13}$$

Equation (13) is the generalized specific force equation and each term of this equation is dimensionless.

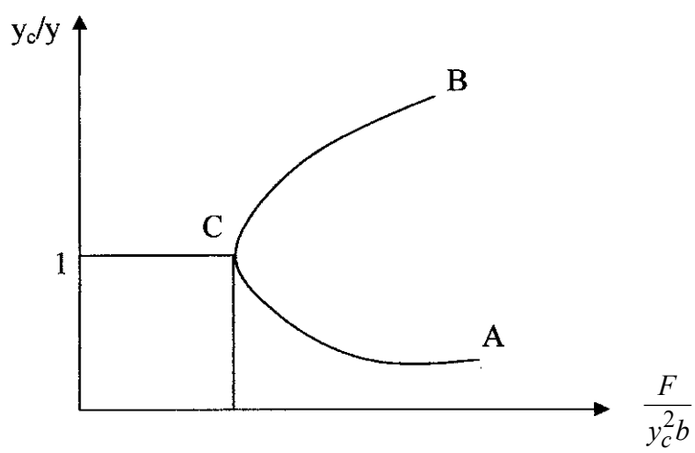

Fig. 5 Dimensionless Specific Force Curve

Objectives:

1. To observe the flow profile in the experimental setup which depict the variation of depth with the change in energy.
2. To plot the generalized specific energy and specific force curves from observed data.

Procedures:

To plot the generalized specific energy and specific force curves it is needed to observe the response of sub-critical (slow) and supercritical (fast) flows to changes in the energy and force of a stream. For this, the setup as in Fig. 6 can be used.

Sub-critical flow exists upstream of the sluice gate and between the sluice gate and the broad crested weir. In the region downstream of the weir the flow is supercritical prior to jump formation.

1. Determine the depth of flow at every section.
2. Determine the actual discharge from flow meter and compute y_c.

3. Compute E/y_c and $F/(y_c^2 b)$ for each of the sections using equations (11) and (13) respectively.
4. Plot y/y_c vs. E/y_c and y/y_c vs. $F/(y_c^2 b)$ on plain graph papers to get the generalized specific energy and specific force curves.

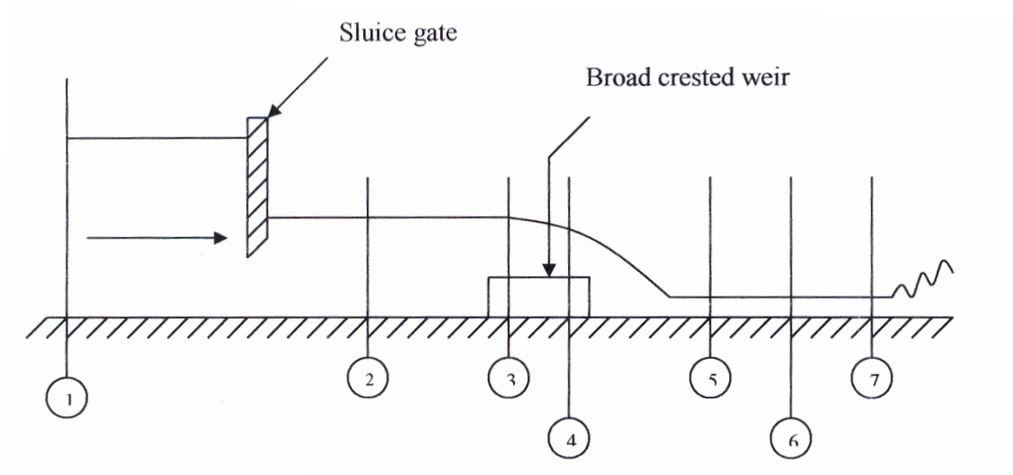

Fig. 6 Sub-critical and Supercritical Flow Regions in a Channel

Assignments

- Derive the equation of critical depth $y_c = \frac{2}{3}E_c$ and $y_c = \left(\frac{2y_1^2 y_2^2}{y_1 + y_2}\right)$
- What are the general features of specific energy curve of an open-channel flow?
- How can you calculate the critical depth, y_c of an open-channel using Froude No.?

Discussion

Comment on the results obtained, practical significance of the results, interpretation of flow patterns, sources of error, etc.

Development of Generalized Specific Energy and Specific Force Curves

DATA SHEET

Volume of water, V = _____ liter; Time, t = _____ sec

Discharge, $Q = \frac{V}{t} =$ _____ m^3/sec

Channel width, b = _____ cm; Critical depth, y_c = _____ cm

Group No.	Section	$y=(y_1+y_2+y_3)/3$	y/y_c	y_c/y	E/y_c	F/y_c^2b
1	1					
	2					
	3					
	4					
	5					
	6					
	7					
2	1					
	2					
	3					
	4					
	5					
	6					
	7					

Name of Student : _____

Roll No.: _____ Group No.: _____ _____

Date : _____ **Signature of Teacher**